Appalto Cup ball Type Analog Load cell

Model: - QSA – 30, 40t

ALPINE systems

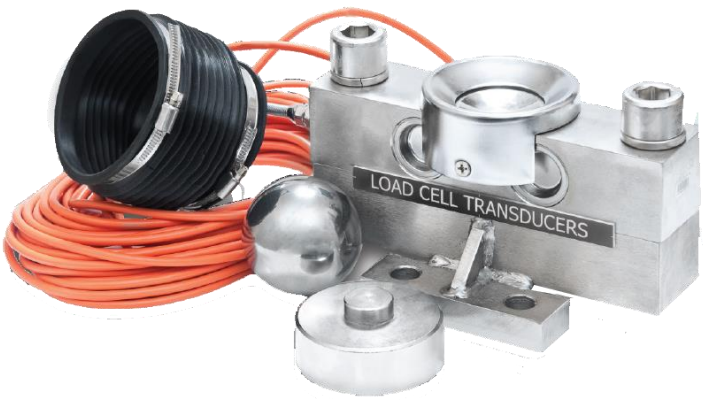

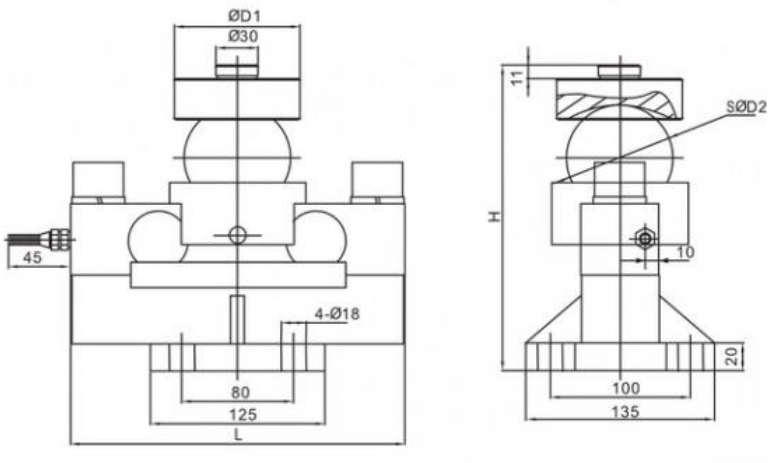

TECHNICAL SPECIFICATION

Rated capacities (Emax)	30, 40t
Sensitivity	2.0±0.002mV/V
Accuracy class	C1~C5
Zero balance	±1%F.S
TCO	±0.02% F.S/10°C
TC SPAN	±0.02% F.S/10°C
Input impedance	750±10Ω
Output impedance	702±3Ω, 703±5Ω
Insulation impedance	≧5000MΩ
Temperature range, compensated	-10°C~+40°C
Temperature range, operating	-30~+70°C
Maximum safe overload	150, 120(40~50t)%F.S
Ultimate overload	300, 200(40~50t)%F.S
Excitation, recommend	10~12V DC
Excitation, maximum	15V DC
Protection class	IP68(10~50t)
Construction	Alloy Steel, Stainless Steel
Cable	Length = L:12/16m(30t), 16m(40~50t), Diameter: Φ6mm

SALIENT FEATURES

Galvanized Bottom: This prevents rusting of body and gives a cleaner look.

Modified Looks: The load cells are given a different finish and they appear cleaner in looks compared to Chinese load cells.

Special Cable: Connecting cable with better finish is provided in orange color. It provides more strength and better noise immunity.

Warranty: These load cells carry a warranty of twelve month from the date of dispatch against any manufacturing defect.

Strong Technical Support: **"APPALTO"** is a reputed brand in the Indian weighing industry for more than 30 Years. Appalto load cells are supported by strong technical team for any field or design related issues.

Connections:

Excitation + : Red

Signal + : Green

Excitation - : Black

Signal - : White

Rated Load	30	40
D1	85-88	88
D2	76.2	76.2
H	224.7	230.7
L	240	240

10 AB, Electronic Complex, Pardeshipura, Indore (M.P.) India -452010 **Ph.** : + 91 – 731 – 6770800 to 6770810
E-mail: info.alpinesystems@gmail.com